SAC3307AQ6

GaAs MMIC 6-BIT DIGITAL PHASE SHIFTER
8~12GHz

Rev 1.1

Features

- Frequency：8~12GHz
- Low Insertion Loss：8dB
- Size：6mm×6mm×1.1mm

Typical Applications

- EW
- Military Radar and Weather Radar
- SATCOM
- Beamforming Modules
- Phase Cancellation

General Description

SAC3307AQ6 bare die was packaged in shell of QFN. The sides of a shell is 6mm. The device is a 6-bit digital phase shifter which works from 8 to 12GHz, providing 360 degrees of phase coverage with a LSB of 5.625 degrees.

This high accuracy phase shifter is controlled with positive control voltage of 0/-5V.

Functional Diagram

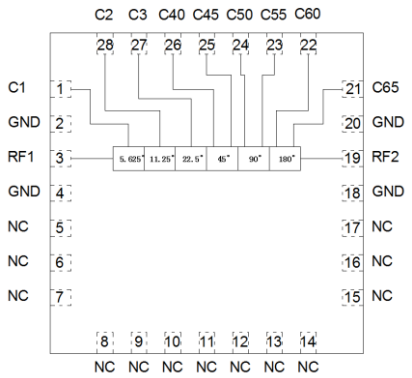

Electrical Performance (T_A=+25℃, Control Voltage=0/-5V,Z_O=50Ω)

Parameter	Min.	Typ.	Max.	Units
Frequency		8~12		GHz
RF1 Return Loss	—	-20	—	dB
RF2 Return Loss	—	-16	—	dB
Insertion Loss	—	-8	—	dB
IL Variation	—	±0.5	—	dB
Phase Accuracy	—	±4	—	°

Truth Table (0 : 0V , 1 : -5V)

Phase	C1	C2	C3	C40	C45	C50	C55	C60	C65
REF	0	0	0	0	1	0	1	0	1
-5.625°	1	0	0	0	1	0	1	0	1
-11.25°	0	1	0	0	1	0	1	0	1
-22.5°	0	0	1	0	1	0	1	0	1
-45°	0	0	0	1	0	0	1	0	1
-90°	0	0	0	0	1	1	0	0	1
-180°	0	0	0	0	1	0	1	1	0
-354.375°	1	1	1	1	0	1	0	1	0

SuperApex, LLC
1580 S. Milwaukee Ave. Suite 405, Libertyville, IL 60048, USA
Tel: 1-847-505-8319, 1-847-573-9866
E-mail: sales@superapexco.com
Website: www.superapexco.com

Absolute Maximum Ratings

Maximum Input Power	+18dBm	Operating Temperature	-55℃~+85℃
Maximum Input Voltage	-8V	Storage Temperature	-65℃~+150℃

Control Voltage

State	Bias
Low	-0.2~0V
High	-4.5~-5.5V

Typical Performance Curve

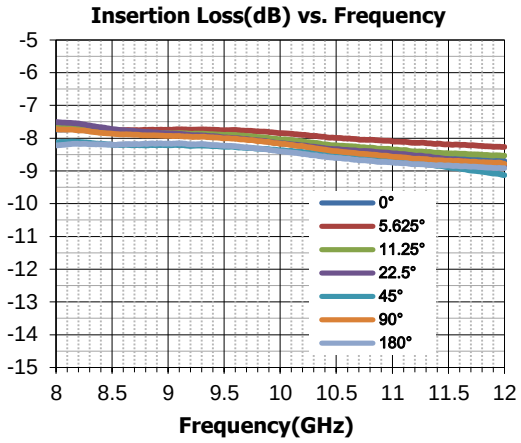

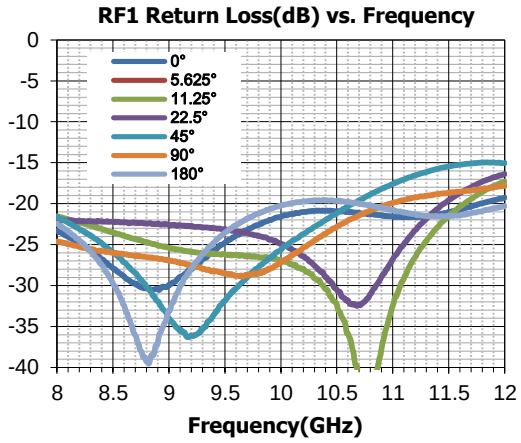

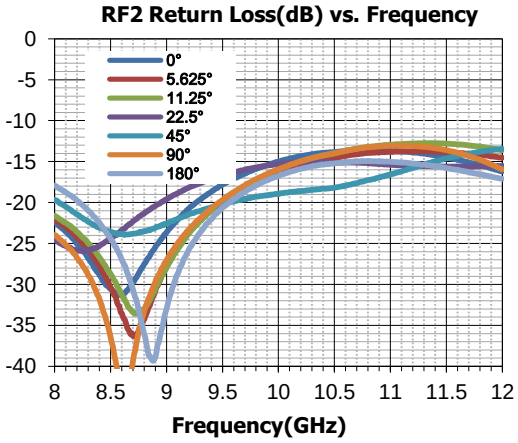

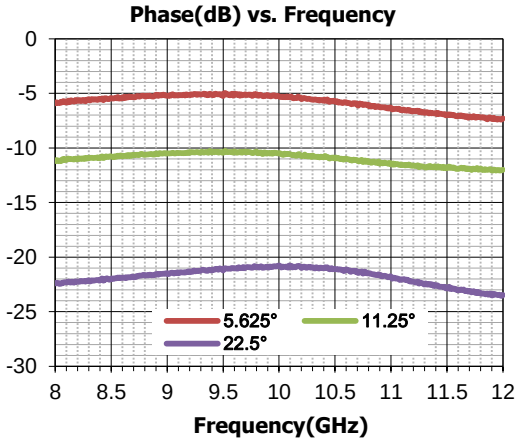

SuperApex, LLC
1580 S. Milwaukee Ave. Suite 405, Libertyville, IL 60048, USA
Tel: 1-847-505-8319, 1-847-573-9866
E-mail: sales@superapexco.com
Website: www.superapexco.com

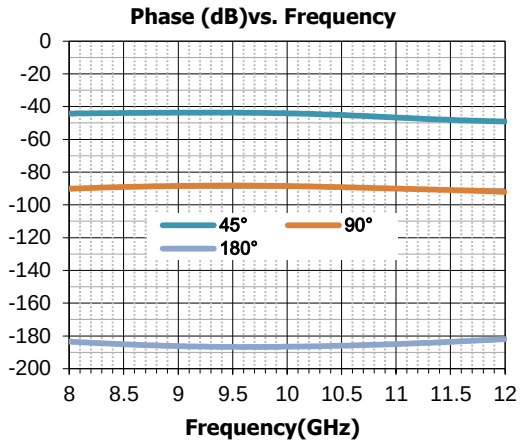

Outline Drawing
(All dimensions in mm)

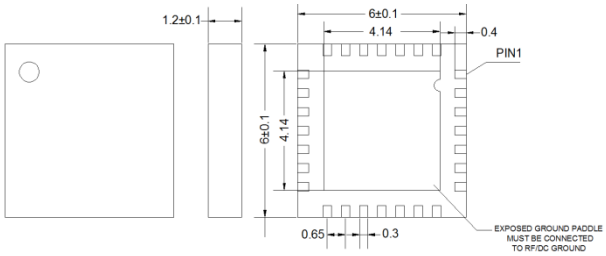

Assembly Diagram

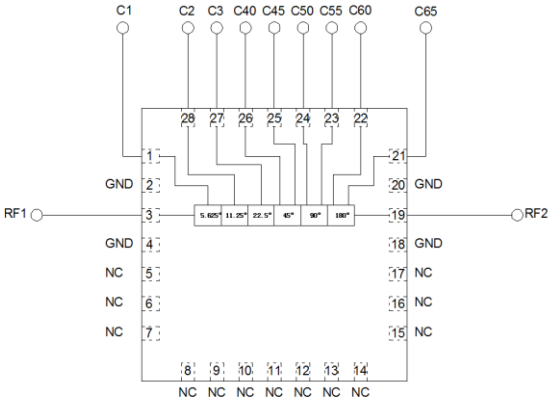

Attention:

1. The moisture resistant grade of products is 2A, the storage environment ≤30° C/60% RH，The surrounding workshop Life is 4 weeks. 2. After un-packing, It is necessary to bake the parts for 6 hours in 125+/-5 degree environment before soldering.

SuperApex, LLC
1580 S. Milwaukee Ave. Suite 405, Libertyville, IL 60048, USA
Tel: 1-847-505-8319, 1-847-573-9866
E-mail: sales@superapexco.com
Website: www.superapexco.com